# XCMG 80 TON

CERTIFICACIÓN DE: GRUA TELESCOPICA
MARCA: XCMG
MODELO: QY80K5D
CAPACIDAD: 80 TON
AÑO: 2024 ASEGURADA Y CERTIFICADA





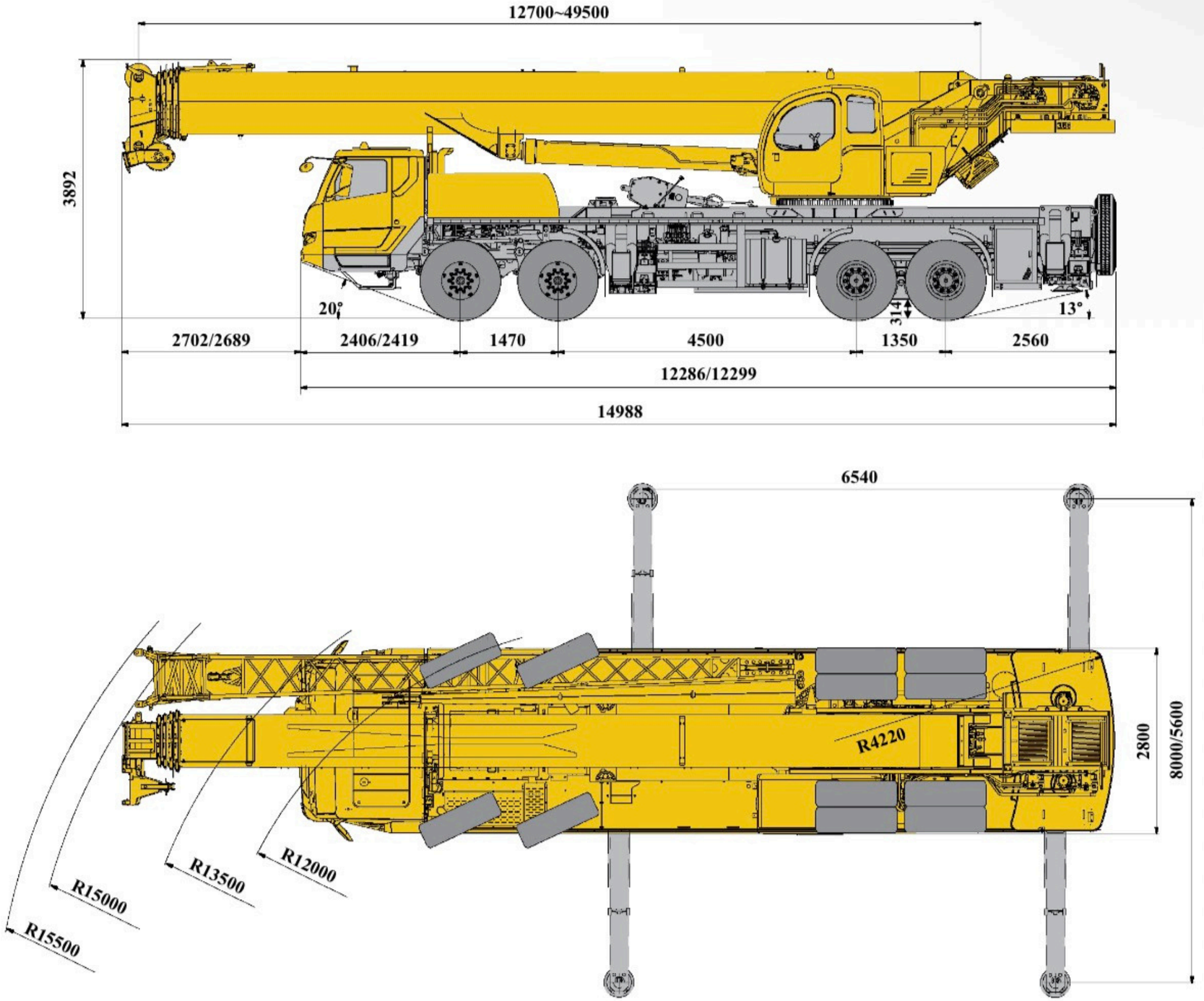
12700~49500
3892
20°
13°
314
2702/2689
2406/2419
1470
4500
1350
2560
12286/12299
14988
6540
R4220
2800
8000/5600
R15500
R15000
R13500
R12000

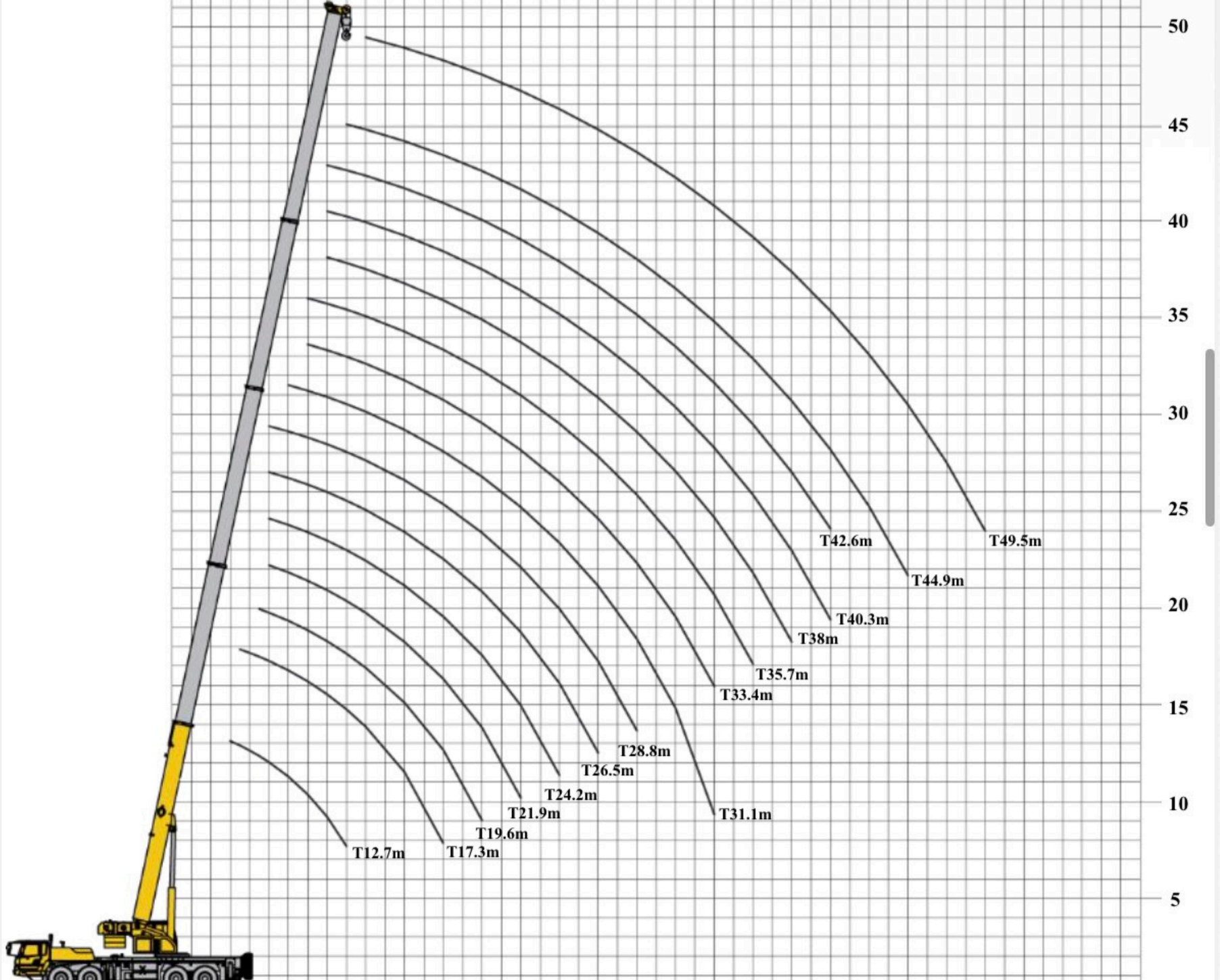
50
45
40
35
30
25
20
15
10
5
T49.5m
T42.6m
T44.9m
T40.3m
T38m
T35.7m
T33.4m
T31.1m
T28.8m
T26.5m
T24.2m
T21.9m
T19.6m
T17.3m
T12.7m

| Axle | 1 | 2 | 3 | 4 | Total weight |
|---|---|---|---|---|---|
| t | 9.9 | 9.9 | 12.9 | 12.9 | 45.6[1)] |
| t | 11.79 | 11.79 | 17.76 | 17.76 | 59.1[2)] |

1) 45.6 t road travel configuration:

Superstructure: jib, 60 t hook block (fastened above the frame), 5 t hook block (fastened at the frame tail) and 3.5 t counterweight are carried; counterweight of 5.5 t and 8 t is removed.

Chassis: spare tire and its bracket are carried, front outrigger float is removed.

Maximum travel speed: 85 km/h; overall dimensions: 14988×2800×3892 mm.

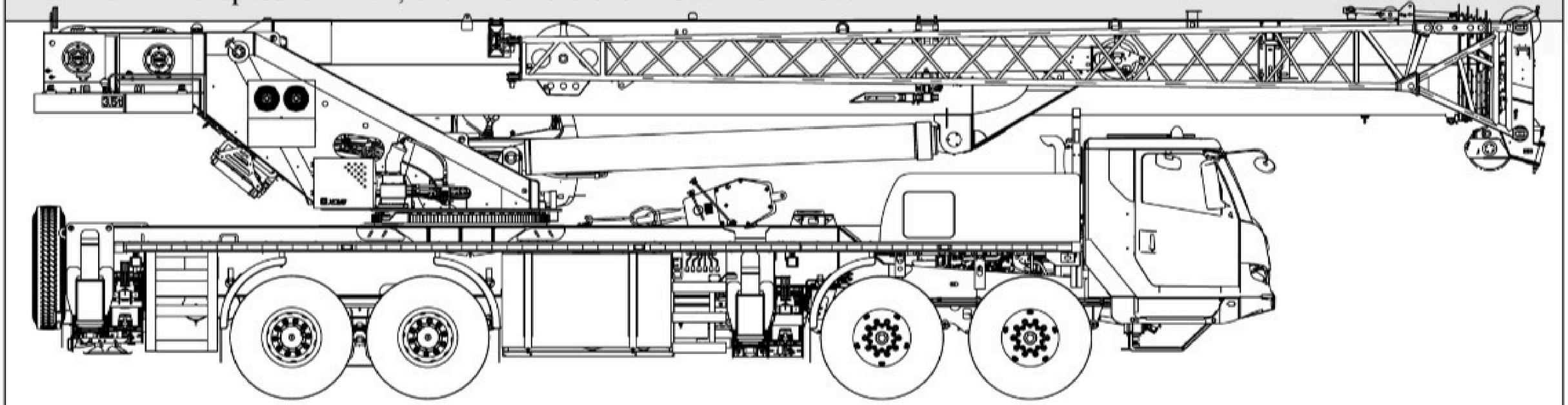

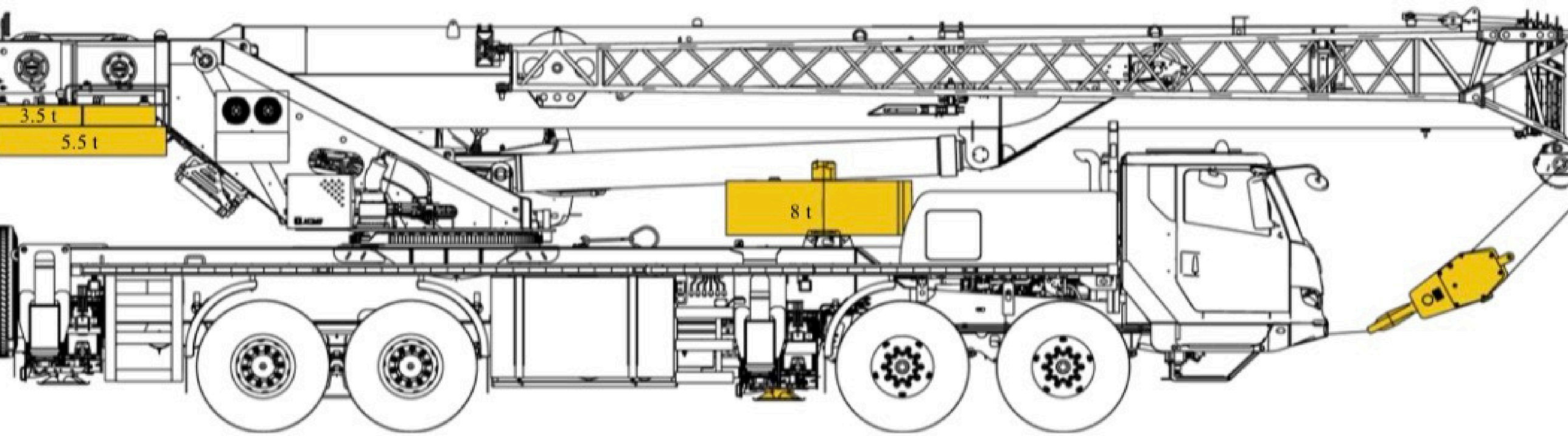


| Hook block | Parts of line | Weight (kg) | Dimensions (mm) | Notes |
|---|---|---|---|---|
| 60 t | 13 | 520 | 1503×572×495 | Single-hook |
| 35 t | 8 | 360 | 430×504×1362 | Single-hook |
| 5 t | 1 | 100 | 300×300×535 | Single-hook |

| | 12.7 | 17.3 | 19.6 | 21.9 | 24.2 | 26.5 | 28.8 | 31.1 | 33.4 | 35.7 | 38 | 40.3 | 42.6 | 44.9 | 49.5 | |
|---|---|---|---|---|---|---|---|---|---|---|---|---|---|---|---|---|
| 3 | 80.0* | | | | | | | | | | | | | | | 3 |
| 3.5 | 61.0 | 57.5 | | | | | | | | | | | | | | 3.5 |
| 4 | 57.0 | 54.0 | | | | | | | | | | | | | | 4 |
| 4.5 | 53.4 | 52.0 | | | | | | | | | | | | | | 4.5 |
| 5 | 48.0 | 45.0 | 31.7 | 36.0 | 30.0 | 31.1 | 29.2 | | | | | | | | | 5 |
| 6 | 38.8 | 38.8 | 31.7 | 36.0 | 30.0 | 30.5 | 29.2 | 30.0 | | | | | | | | 6 |
| 7 | 32.5 | 32.2 | 31.7 | 32.2 | 30.0 | 28.7 | 28.8 | 29.6 | 18.8 | 24.3 | | | | | | 7 |
| 8 | 28.0 | 27.4 | 31.0 | 27.4 | 26.9 | 26.9 | 26.0 | 27.6 | 19.2 | 22.5 | 18.7 | 14.0 | 18.1 | | | 8 |
| 9 | 24.0 | 23.5 | 29.0 | 23.5 | 25.0 | 24.5 | 22.9 | 24.0 | 17.8 | 21.0 | 18.6 | 14.0 | 17.2 | 13.9 | | 9 |
| 10 | | 20.7 | 25.0 | 20.0 | 22.2 | 21.7 | 20 | 21.1 | 16.5 | 19.3 | 17.4 | 13.9 | 16.2 | 13.8 | 12.5 | 10 |
| 12 | | 16.1 | 21.5 | 16.0 | 17.3 | 18.5 | 17.0 | 18.0 | 14.3 | 16.4 | 15.2 | 12.2 | 14.4 | 12.4 | 11.7 | 12 |
| 14 | | 13.0 | 16.5 | 12.8 | 14.1 | 15.0 | 13.5 | 14.6 | 12.7 | 14.0 | 13.6 | 10.8 | 12.7 | 11.1 | 10.8 | 14 |
| 16 | | | 13.0 | 10.5 | 11.7 | 13.0 | 11.5 | 12.3 | 11.2 | 12.0 | 12.2 | 9.6 | 11.3 | 10.0 | 9.7 | 16 |
| 18 | | | | 8.2 | 9.9 | 11.0 | 9.5 | 10.3 | 10.1 | 10.0 | 11.0 | 8.7 | 10.0 | 9.2 | 8.7 | 18 |
| 20 | | | | | 8.1 | 9.4 | 7.6 | 8.8 | 9.1 | 8.4 | 9.3 | 7.8 | 8.8 | 8.4 | 7.8 | 20 |
| 22 | | | | | | 7.9 | 6.2 | 7.3 | 8.3 | 6.9 | 7.8 | 7.1 | 7.4 | 7.7 | 7.0 | 22 |
| 24 | | | | | | | 5.0 | 6.2 | 7.1 | 5.7 | 6.6 | 6.5 | 6.2 | 6.9 | 6.3 | 24 |
| 26 | | | | | | | | 5.2 | 6.1 | 4.8 | 5.6 | 6.0 | 5.2 | 5.9 | 5.5 | 26 |
| 28 | | | | | | | | 4.4 | 5.3 | 3.9 | 4.8 | 5.4 | 4.4 | 5.1 | 4.7 | 28 |
| 30 | | | | | | | | | | 3.2 | 4.1 | 4.8 | 3.7 | 4.4 | 4.0 | 30 |
| 32 | | | | | | | | | | | 3.5 | 4.2 | 3.1 | 3.8 | 3.4 | 32 |
| 34 | | | | | | | | | | | | 3.7 | 2.6 | 3.3 | 2.9 | 34 |
| 36 | | | | | | | | | | | | | 2.1 | 2.8 | 2.4 | 36 |
| 38 | | | | | | | | | | | | | | 2.4 | 2.0 | 38 |
| 40 | | | | | | | | | | | | | | | 1.7 | 40 |
| 42 | | | | | | | | | | | | | | | 1.3 | 42 |

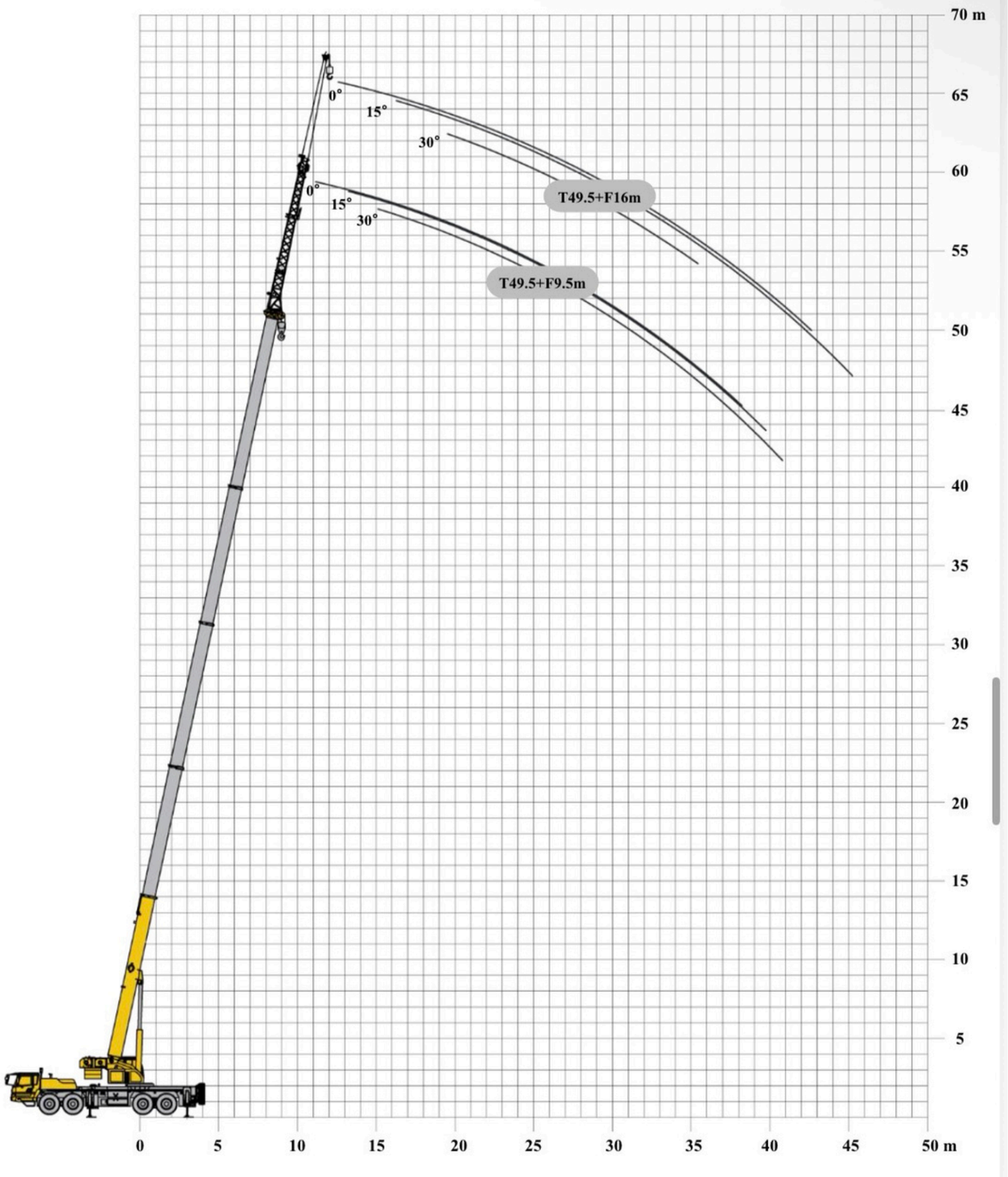

# Load charts

## Fixed jib

**F 9.5/16m**

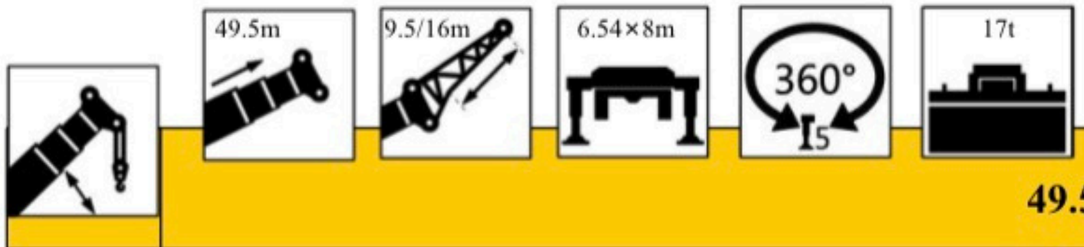


**49.5**

| | 9.5 | | | 16 | | | |
|---|---|---|---|---|---|---|---|
| | 0° | 15° | 30° | 0° | 15° | 30° | |
| 80 | 5.0 | 5.0 | 2.8 | 4.5 | 3.4 | 1.3 | 80 |
| 78 | 5.0 | 5.0 | 2.7 | 4.4 | 3.1 | 1.1 | 78 |
| 75 | 5.0 | 5.0 | 2.5 | 4.3 | 2.7 | 1.0 | 75 |
| 72 | 5.0 | 4.9 | 2.3 | 4.3 | 2.5 | 1.0 | 72 |
| 70 | 5.0 | 4.7 | 2.2 | 4.1 | 2.3 | 0.9 | 70 |
| 65 | 4.7 | 4.0 | 2.0 | 3.7 | 2.1 | 0.8 | 65 |
| 60 | 3.7 | 3.3 | 1.9 | 3.0 | 1.9 | 0.7 | 60 |
| 55 | 2.8 | 2.6 | 1.8 | 2.2 | 1.7 | 0.7 | 55 |
| 50 | 2.0 | 1.9 | 1.7 | 1.6 | 1.5 | 0.6 | 50 |